USB 1.1 AND USB 2.0 BUS CONNECTION
MAX CABLE LENGTH 5M

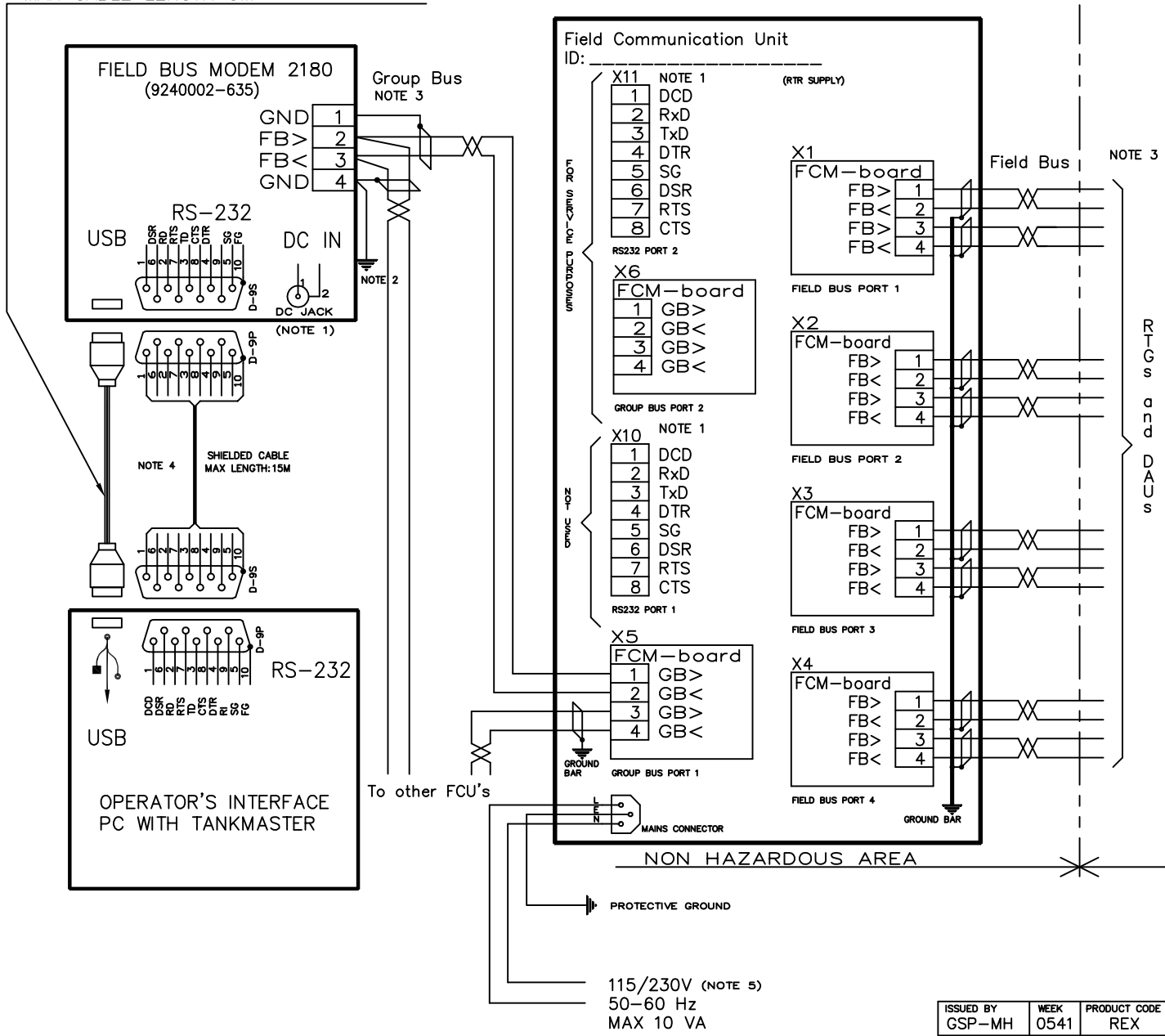

Tank ID	Port	RTG	DAU

NOTE 1
AN EXTERNAL DC POWER SOURCE IS REQUIRED TO SUPPLY THE FIELD BUS MODEM ONLY FOR RS-232 OPERATION. USE THE RTR SUPPLIED UNIT 6853502-070 OR ANY OTHER AC/DC ADAPTOR (7-12V, 0,1A) WITH A 5.5mm DC PLUG.

NOTE 2
GROUND CONNECTION
FOR OVERVOLTAGE PROTECTION

NOTE 3
TRL/2 BUS TO FCU OR FIELD DEVICES (RTG & IDAU).
SINGLE TWISTED, PREFERRABLY SHIELDED PAIR
MULTIDROP, POLARITY INDEPENDENT.
INDIVIDUAL SHIELDING IS MANDATORY IF
TWO BUSES RUN IN THE SAME CABLE.

RECOMMENDED WIRING LENGTH:
AWG 24 (0,25 mm2): <1km
AWG 22 (0,35 mm2): <2km
AWG 20 (0,50 mm2): <3km
AWG 18 (0,75 mm2): <4km

NOTE 4
USB AND RS-232 ARE ALTERNATIVE BUS CONNECTIONS

NOTE 5
MAINS VOLTAGE SELECTOR ON PCB.

ISSUED BY	WEEK	PRODUCT CODE	FILE	INSTALLATION DRAWING TITLE
GSP-MH	0541	REX	ACAD	EL. INSTALLATION DWG PC-FBM-FCU
APPROVED BY	WEEK	ORIGINAL DWG NO.	SCALE	
GSP	0541	9240002-959	-	

ROSEMOUNT Tank Gauging

1 ST ANGLE	DOC TYPE	DWG NO.	ISSUE	SHEET
	2	9240002-959	02	1/1

THE COPYRIGHT/OWNERSHIP OF THIS DOCUMENT IS AND WILL REMAIN OURS. THE DOCUMENT MUST NOT BE USED WITHOUT OUR AUTHORIZATION OR BROUGHT TO THE KNOWLEDGE OF A THIRD PARTY. CONTRAVENTION WILL BE PROSECUTED. ROSEMOUNT TANK RADAR AB, SWEDEN.

INST. DWG. A3 070213