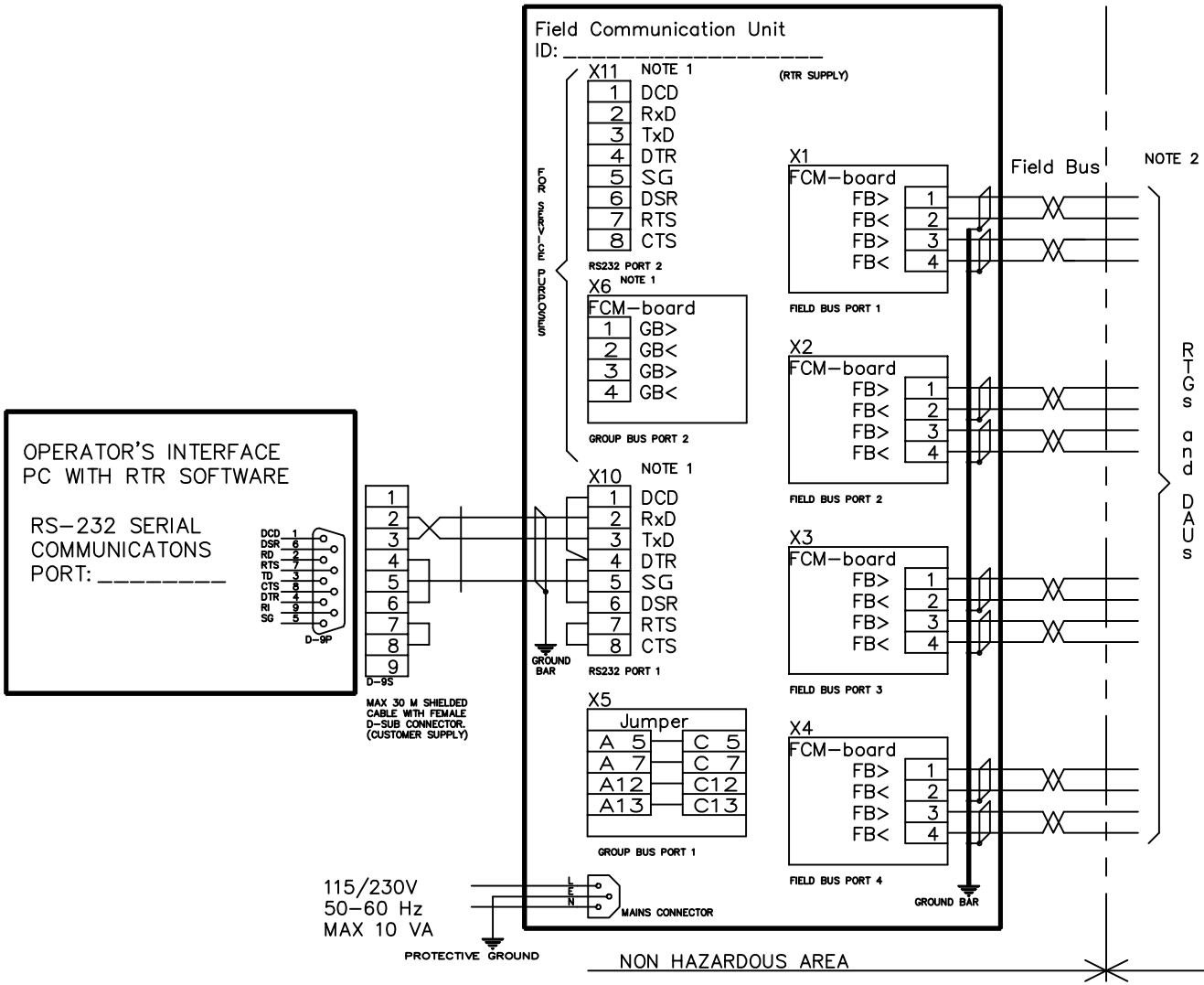

Tank ID	Port	RTG	DAU

NOTE 1
WHEN A RS-232 PORT (X10 OR X11) IS BEEING USED, A SPECIAL JUMPER (9240 002-731) MUST BE PRESENT IN X5 OR X6 RESPECTIVELY.

NOTE 2
TRL/2 BUS. CUSTOMER SUPPLIED SINGLE TWISTED, PREFERABLY SHIELDED PAIR. INDIVIDUAL SHIELDING IS MANDATORY WHERE TWO BUSES RUN ALONGSIDE. MIN. AWG 20 - 0.5 SQMM. THE TWO WIRES MAY BE INTERCHANGED.

ISSUED BY	WEEK	PRODUCT CODE	FILE	INSTALLATION DRAWING TITLE
GKM	9137	REX	ACAD	EL.INSTALLATION DRAWING PC-FCU WITH RS232
APPROVED BY	WEEK	ORIGINAL DWG NO.	SCALE	
GKT	9137	9240 002-905		

ROSEMOUNT Tank Gauging

1 ST ANGLE	DOC TYPE	DWG NO.	ISSUE	SHEET
	2	9240 002-905	6	1/1

THE COPYRIGHT/OWNERSHIP OF THIS DOCUMENT IS AND WILL REMAIN OURS. THE DOCUMENT MUST NOT BE USED WITHOUT OUR AUTHORIZATION OR BROUGHT TO THE KNOWLEDGE OF A THIRD PARTY. CONTRAVENTION WILL BE PROSECUTED. ROSEMOUNT TANK RADAR AB, SWEDEN.

INST. DWG. A3 070213